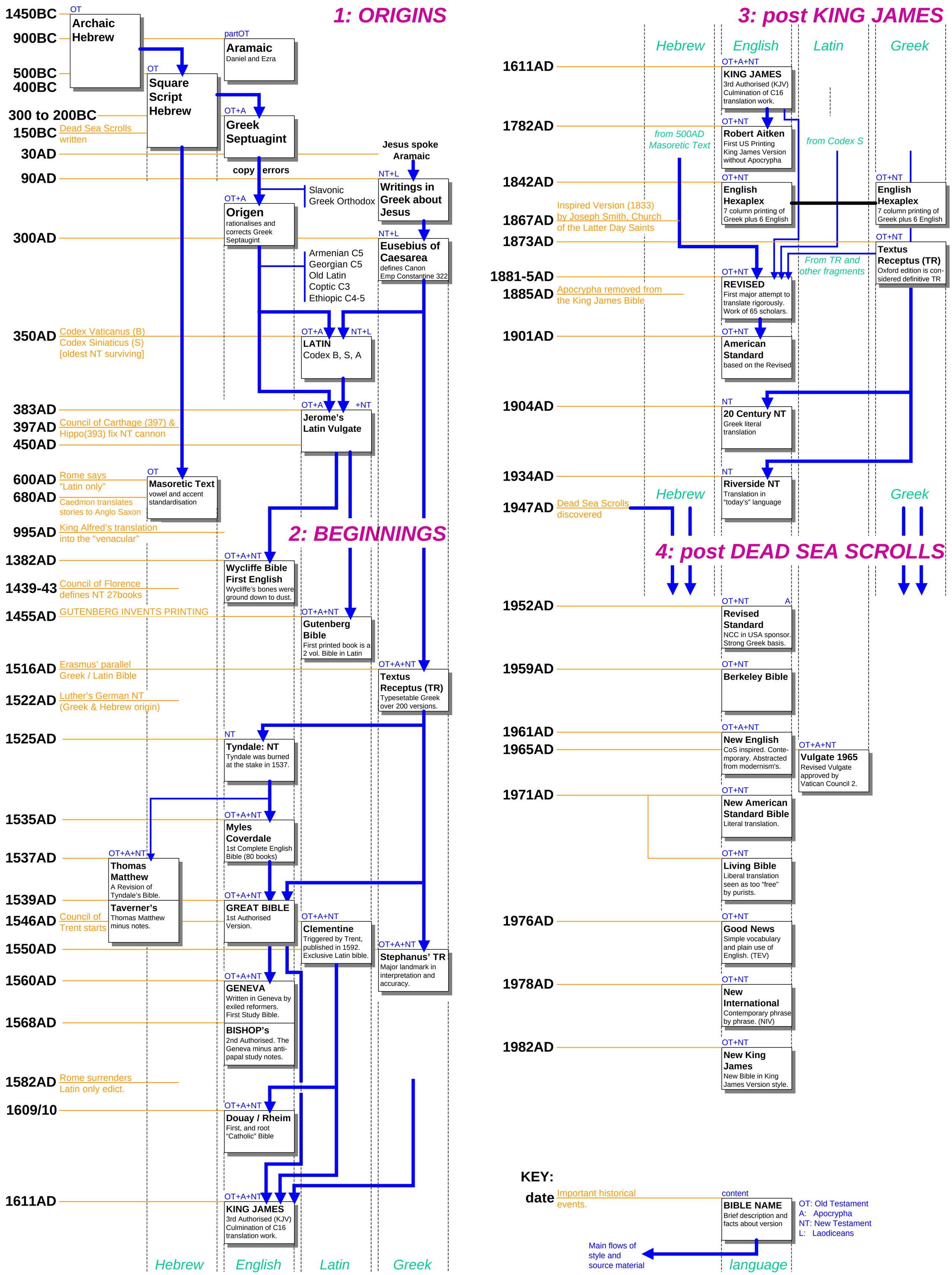History and Lineage of the English Bible